SQUARE STRAIGHT ALUMINUM POLE

SNTA 5"

PROJECT NAME:

PROJECT TYPE:

FEATURES

Shaft
5" square, extruded from 6063 alloy aluminum tubing. Heat treated to produce a T6 temper. Shaft includes a hand hole furnished with cover. Shaft is furnished with ground lugs located on cast aluminum base plate.

Base Plate
Cast aluminum constructed of A-356 aluminum alloy heat treated to produce a T6 temper. Structurally engineered base includes eight heavy wall reinforcing vertical gussets. Base telescopes and is circumferentially welded to shaft at both the outside top and inside bottom of the base.

Anchorage
(4) anchor bolts fabricated from hot rolled steel bar. Minimum yield strength of 50,000 P.S.I. bolts have "L" bend on one end and are threaded on the other. Bolts are fully galvanized and are furnished with two nuts and two washers.

Base Cover
Fabricated from heavy gauge quality carbon steel. Two-piece cover conceals base.

Finish
Electrostatically applied TGIC Polyester Powder Coat on substrate prepared with 20 PSI power wash at 140°F. Four step media blast and iron phosphate pretreatment for protection and paint adhesion. 400°F bake for maximum hardness and durability.

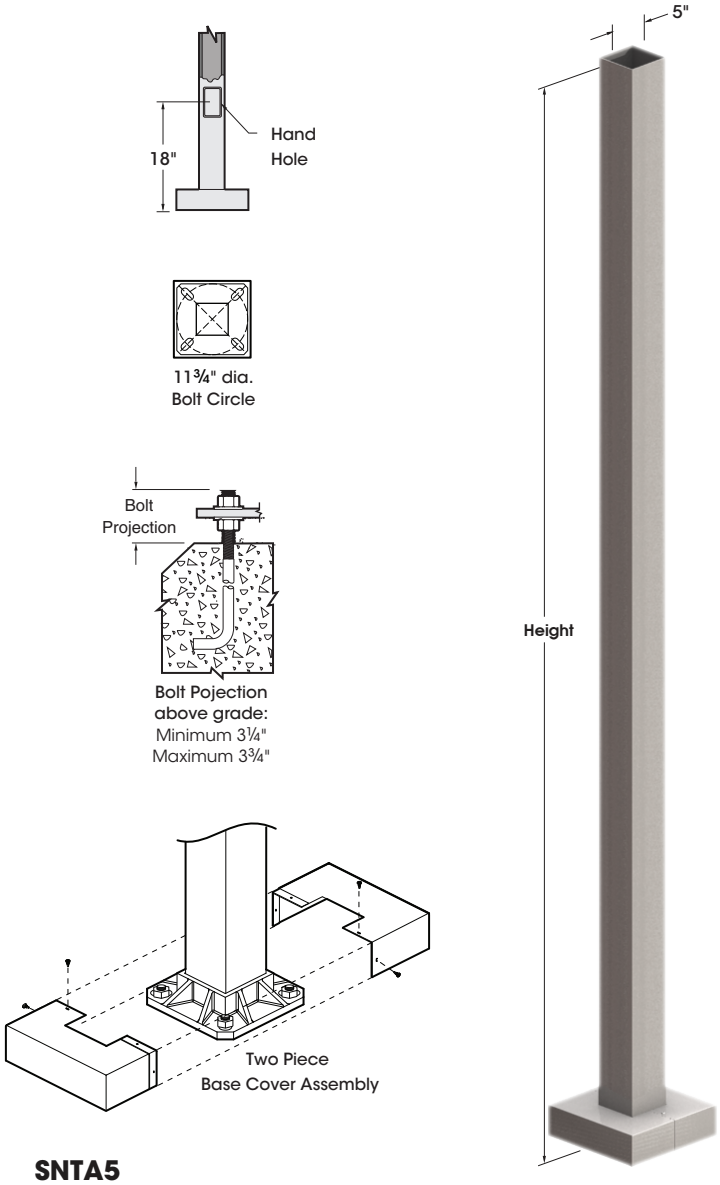

SNTA5

Pole Top Mount

PT23 - 2⅜"X4" Tenon **PT27** - 2⅞"X4" Tenon

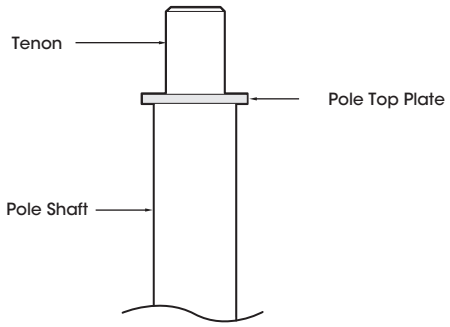

Hand Hole Cover

Hand hole cover with
tamper resistant bolt assembly

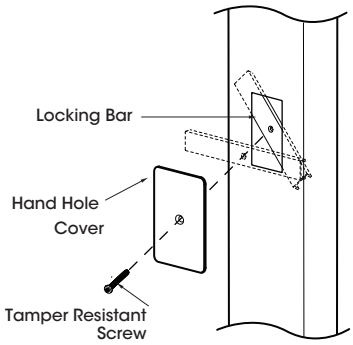

U.S. Pole Co Inc.
660 West Avenue O, Palmdale, CA 93551
Phone (661) 233-2000 Fax (661) 233-2001
www.usaltg.com

MADE IN THE USA

U.S. ARCHITECTURAL LIGHTING

☐ SNTA 5"

SPECIFICATIONS

Engineering Data
Maximum EPA - Square Feet

Model Number	Max. Fixture Weight	100 MPH	90 MPH	80 MPH	70 MPH
SNTA 125 - 125	150	6.6	8.1	10.4	12.8
SNTA 145 - 125	100	5.1	6.3	8.3	10.0
SNTA 165 - 125	100	3.5	5.0	6.2	7.6
SNTA 185 - 188	200	6.5	9.6	13.4	19.5
SNTA 205 - 188	200	4.2	6.9	10.3	15.5
SNTA 255 - 188	100	N/A	1.9	4.9	8.7

All above design calculations are based on sustained wind forces plus additional 1.3 wind gust
(Example: Pole rated at 80 MPH withstands 104 MPH gusts)

Drilled Side Mount
Specify drilling location using codes below.

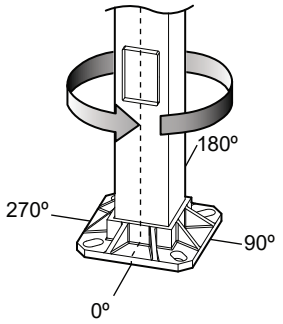

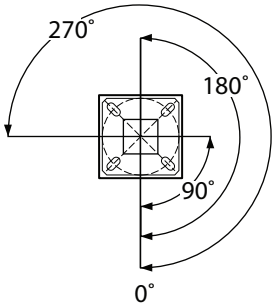

ORDERING INFORMATION

Spec/Order Example: SNTA185-188/4-90/RAL-8019-T

Pole Model Number - SNTA 5"	Mounting	Finish	Options

Pole Model Number - SNTA 5"

	Pole Height	Wall Thickness	Bolt Circle	Anchorage
☐ **SNTA 125 - 125**	12'	.125	11¾"	¾"X24"X3"
☐ **SNTA 145 - 125**	14'	.125	11¾"	¾"X24"X3"
☐ **SNTA 165 - 125**	16'	.125	11¾"	¾"X24"X3"
☐ **SNTA 185 - 188**	18'	.188	11¾"	¾"X24"X3"
☐ **SNTA 205 - 188**	20'	.188	11¾"	¾"X24"X3"
☐ **SNTA 255 - 188**	25'	.188	11¾"	¾"X24"X3"

☐ Specify other heights _____

Mounting

Arm Mount

☐ **PT23**
2³/₈" X 4" Tenon

☐ **PT27**
2⁷/₈" X 4" Tenon

☐ Other Tenon Mt _____

Drill Mount

☐ **1** .....

☐ **2-180** .....

☐ **2-90** .....

☐ **3-90** .....

☐ **4-90** .....

☐ **3-120** .....

3-120 requires PT27 and T3120 Adapter

Finish

Standard Textured Finish

☐ Black
RAL-9005-T

☐ White
RAL-9003-T

☐ Grey
RAL-7004-T

☐ Dark Bronze
RAL-8019-T

☐ Green
RAL-6005-T

For Smooth Finish replace suffix "T" with suffix "T"
Example: RAL-9005-S

See USALTG.COM for additional colors

Options

Receptacle

☐ Duplex Receptacle
DUP

☐ GFI Receptacle
GFI

☐ 3 Way Adapter
T3120

Coupling

☐ ½" Coupling
CPLN1/2

☐ ¾" Coupling
CPLN3/4

☐ 2" Coupling
CPLN2

Specify Coupling location

Refer to the Accessories Section for other options

U.S. Pole Co Inc. | 660 West Avenue O, Palmdale, CA 93551
Phone (661) 233-2000 Fax (661) 233-2001
www.usaltg.com

MADE IN THE USA

U.S. ARCHITECTURAL LIGHTING